RAS-060-005

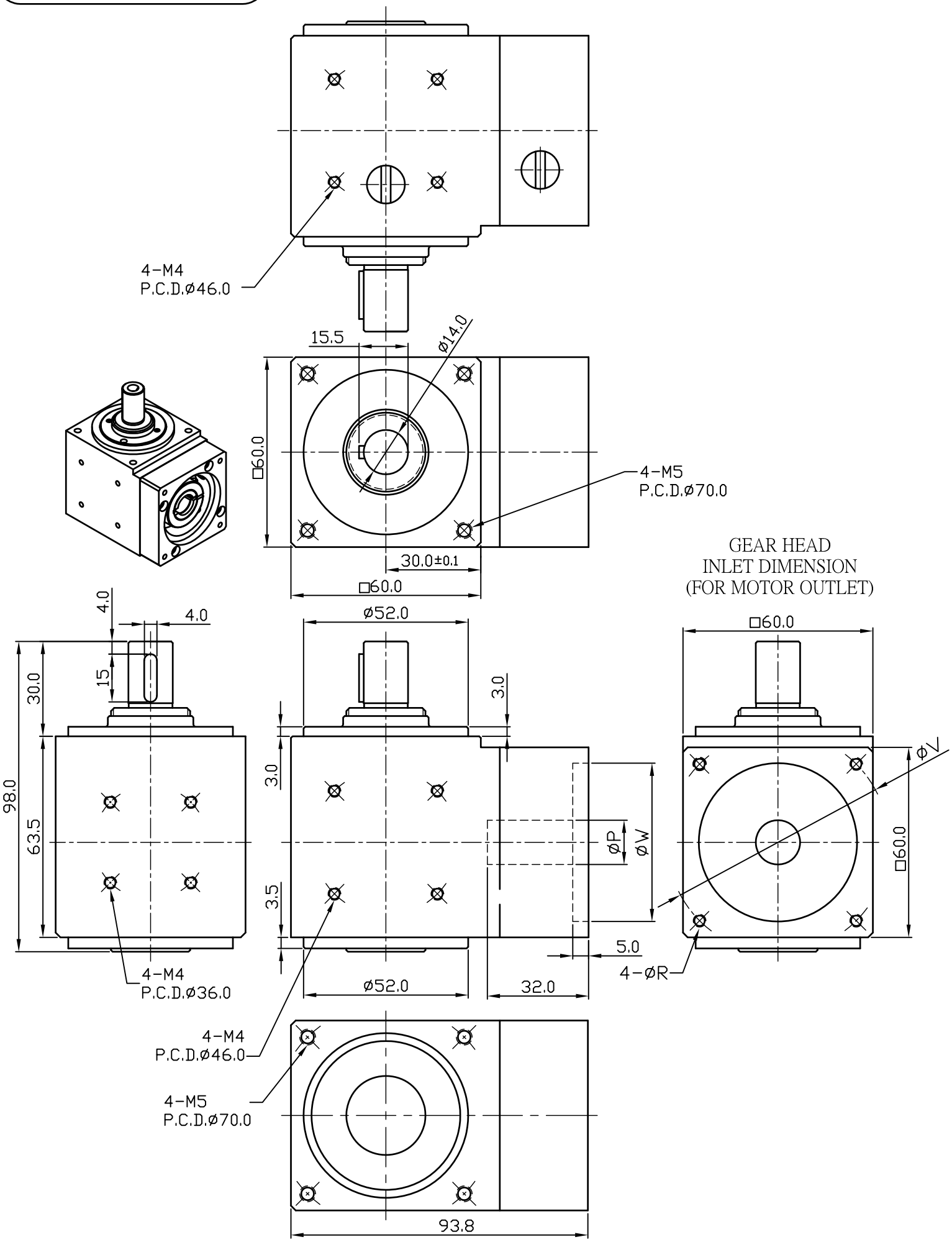
4-M4
P.C.D.ø46.0
15.5
ø14.0
□60.0
4-M5
P.C.D.ø70.0
30.0±0.1
□60.0
GEAR HEAD
INLET DIMENSION
(FOR MOTOR OUTLET)
4.0
4.0
30.0
15
98.0
63.5
4-M4
P.C.D.ø36.0
ø52.0
3.0
3.0
3.5
ø52.0
32.0
ØP
ØW
5.0
□60.0
ØV
□60.0
4-ØR
4-M4
P.C.D.ø46.0
4-M5
P.C.D.ø70.0
93.8