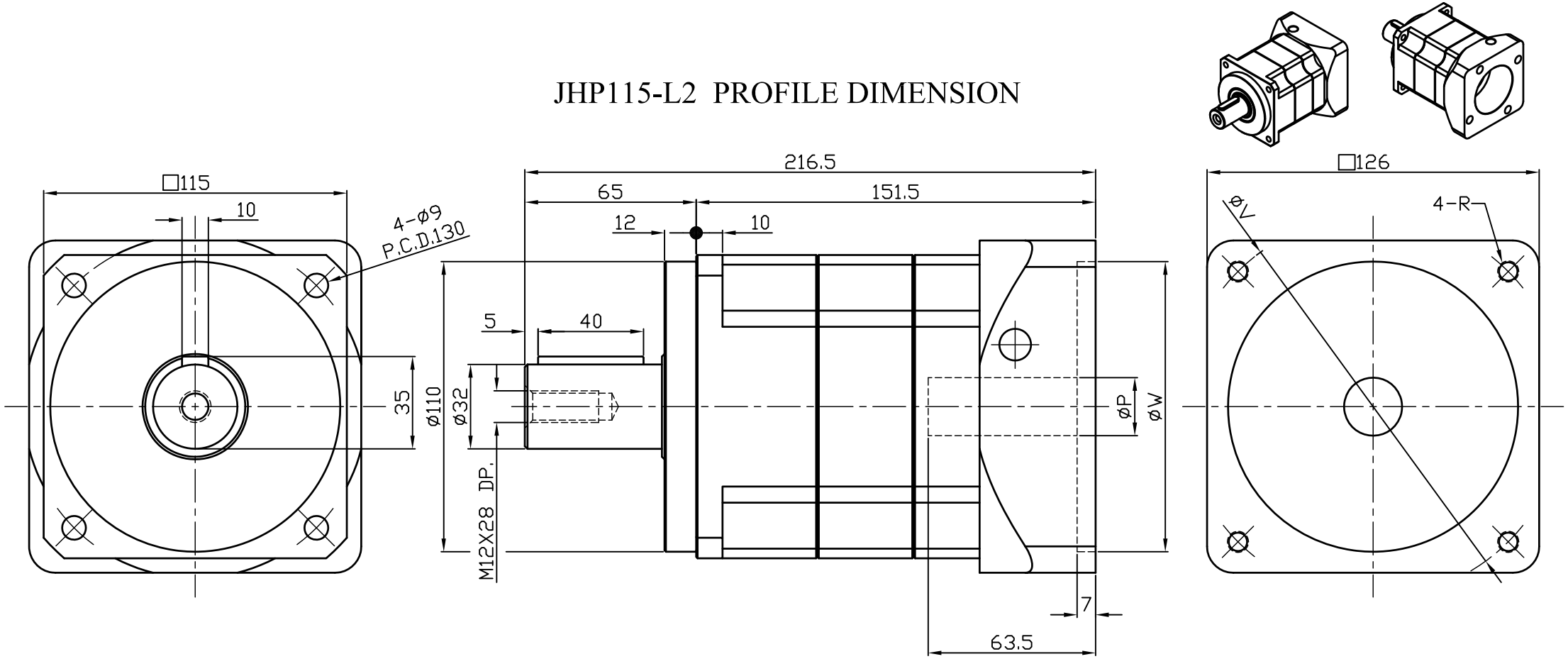JHP115-L2 PROFILE DIMENSION